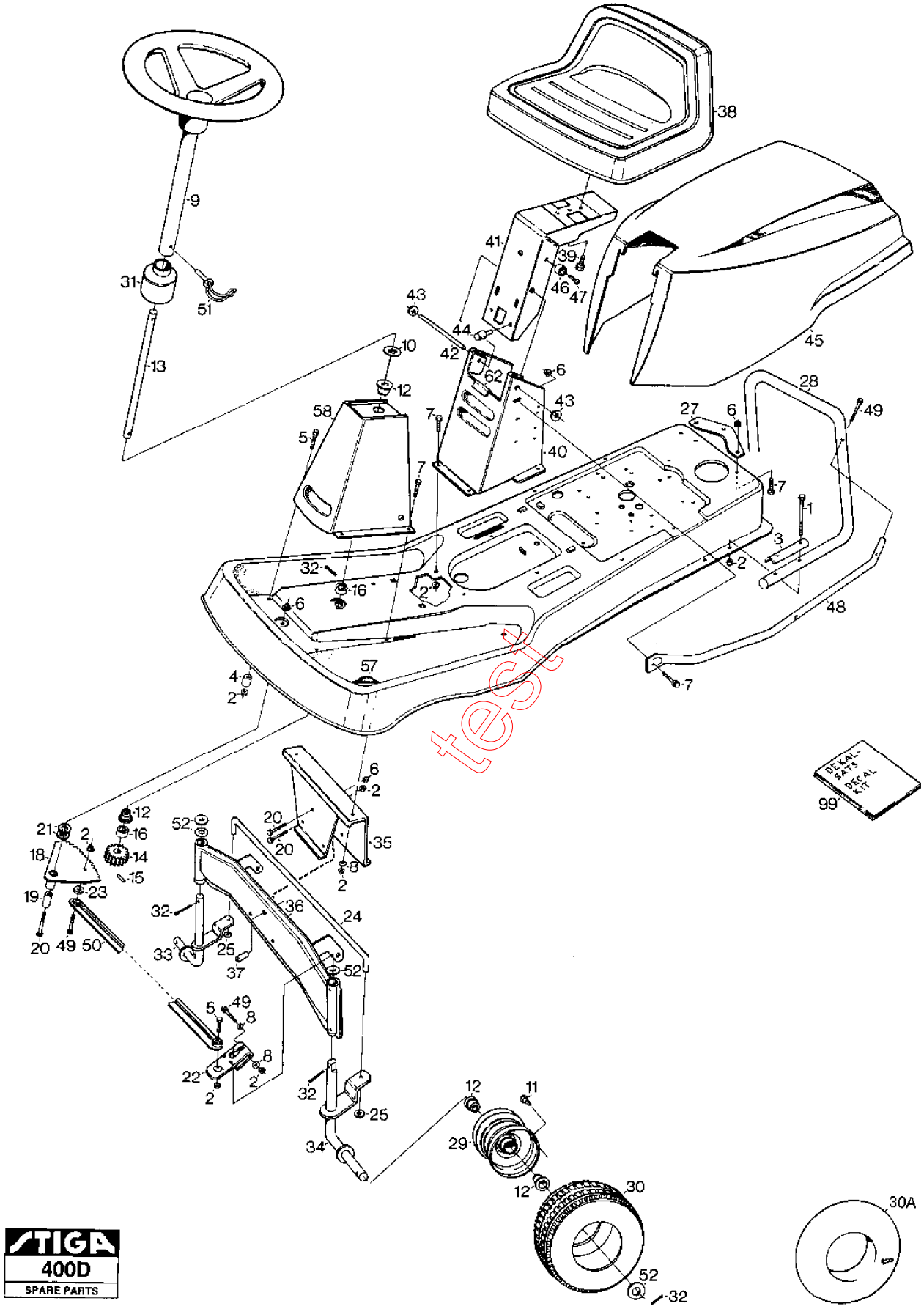
38
9
41
39
46
47
31
51
43
44
42
10
12
13
62
6
43
58
7
27
6
28
49
5
40
7
7
1
3
32
16
2
2
6
48
57
4
2
7
6
2
DEKAL-SATS
DECAL KIT
99
21
2
12
16
18
14
15
19
23
20
49
50
52
20
20
35
8
2
32
36
24
33
25
37
52
5
49
8
8
22
2
2
32
25
34
12
11
29
12
30
52
32
30A
STIGA
400D
SPARE PARTS

test

# Section: SCOOP - GARDEN CHASSIS STEERING

| Pos. | Quantity 2021 | 2022 | 2328 2330 | Spare part No | Description | Kit | Notes | New |
|---|---|---|---|---|---|---|---|---|
| 1 | 4 | 4 | 4 | 9997-0890-12 | Screw | | | |
| 2 | 17 | 17 | 17 | 9747-0831-02 | Lock nut | | | |
| 3 | 2 | 2 | 2 | 1134-3165-01 | Tube plate | | | |
| 4 | 2 | 2 | 2 | 1134-3113-01 | Spacer | | | |
| 5 | 3 | 3 | 3 | 9997-0830-16 | Screw | | | |
| 6 | 4 | 4 | 6 | 9739-0831-22 | Nut | | | |
| 7 | 8 | 8 | 10 | 9997-0820-16 | Screw | | | |
| 8 | 4 | 4 | 4 | 9699-0090-02 | Flat washer | | | |
| 9 | 1 | 1 | 1 | 1134-3192-01 | Steering wheel assy | | | |
| 10 | 1 | 1 | 1 | 1134-0341-01 | .Washer | | 1.5 mm | |
| 10 | 1 | 1 | 1 | 1134-0341-02 | .Washer | | 0.5 mm | |
| 11 | 2 | 2 | 2 | 9545-0500-00 | Valve | | | |
| 12 | 2 | 2 | 2 | 1134-9024-01 | Bearing | | Sats 4 st/kit of 4 | |
| 13 | 1 | 1 | 1 | 1134-3190-01 | Steering column | | | |
| 14 | 1 | 1 | 1 | 1134-3086-01 | Sprocket | | | |
| 15 | 1 | 1 | 1 | 9595-0258-00 | Locating pin | | | |
| 16 | 2 | 2 | 2 | 1134-3162-01 | Spacer | | | |
| 18 | 1 | 1 | 1 | 1134-3080-02 | Toothed segment | | | |
| 19 | 1 | 1 | 1 | 1134-1565-01 | Spacer | | | |
| 20 | 4 | 4 | 4 | 9997-0855-12 | Screw | | | |
| 21 | 2 | 2 | 2 | 9699-0056-02 | Flat washer | | | |
| 22 | 1 | 1 | 1 | 1134-3115-01 | Steering arm | | | |
| 23 | 1 | 1 | 1 | 1134-3113-01 | Spacer | | | |
| 24 | 1 | 1 | 1 | 1134-2096-02 | Tie rod | | | |
| 25 | 2 | 2 | 2 | 9675-0015-02 | Lock washer | | | |
| 27 | | | 1 | 1134-1774-01 | Towing eyelet | | | |
| 28 | 1 | 1 | 1 | 1134-3140-01 | Bumper | | | |
| 29 | | | 2 | 1134-3726-01 | Rim | | | |
| 29 | 2 | 2 | | 1134-3726-03 | Rim | | | |
| 30 | 2 | 2 | 2 | 9545-0114-00 | Tyre | | 11 x 4.00 - 4 | |
| 30A | | | | 9545-0201-00 | Inner tube | | Reservdel/spare par | |
| 31 | 1 | 1 | 1 | 1134-3166-01 | Steering rod sleeve | | | |
| 32 | 5 | 5 | 5 | 9599-0080-02 | Cotter pin | | | |
| 33 | 1 | 1 | 1 | 1134-3118-01 | Spindle-R.H. | | | |
| 34 | 1 | 1 | 1 | 1134-3120-01 | Spindle-L.H. | | | |
| 35 | 1 | 1 | 1 | 1134-3107-01 | Front axle bracket | | | |
| 36 | 1 | 1 | 1 | 1134-3151-01 | Front axle | | | |
| 37 | 1 | 1 | 1 | 1134-3155-01 | Spacer tube | | | |
| 38 | 1 | 1 | 1 | 1134-3238-01 | Seat | | | |
| 39 | 1 | 1 | 1 | 9988-3919-16 | Screw | | | |
| 40 | 1 | 1 | 1 | 1134-3135-01 | Seat bracket-yellow | | | |
| 41 | 1 | 1 | 1 | 1134-3138-01 | Seat support | | | |
| 42 | 1 | 1 | 1 | 1134-0022-00 | Control rod | | | |
| 43 | 2 | 2 | 2 | 9675-0017-02 | Lock washer | | | |
| 44 | 2 | 2 | 2 | 1134-3134-01 | Rubber spring | | | |
| 45 | 1 | 1 | 1 | 1134-3091-01 | Engine hood-yellow | | | |
| 46 | | | 2 | 1134-3163-01 | Button | | | |
| 47 | | | 2 | 9849-8013-16 | Screw | | | |
| 48 | 2 | 2 | 2 | 1134-3139-01 | Tubing | | | |
| 49 | 4 | 4 | 4 | 9997-0845-12 | Screw | | | |
| 50 | 1 | 1 | 1 | 1134-3247-01 | Tie rod | | | |
| 51 | 1 | 1 | 1 | 1134-3167-01 | Locking clip | | | |
| 52 | 5 | 5 | 5 | 1134-0341-01 | Washer | | | |
| 57 | 1 | 1 | 1 | 1134-3537-02 | Floor mat-L.H. | | | |
| 57A | 1 | 1 | 1 | 1134-3149-01 | Floor mat-R.H. | | Ej ill/not ill. | |
| 58 | 1 | 1 | 1 | 1134-3199-01 | Steering console-ye | | | |
| 62 | 1 | 1 | 1 | 1134-3281-01 | Strip | | | |
| 99 | 1 | 1 | 1 | 1134-3556-01 | Decal kit | | | |

test